PEMKO HOSPITALITY PRODUCTS

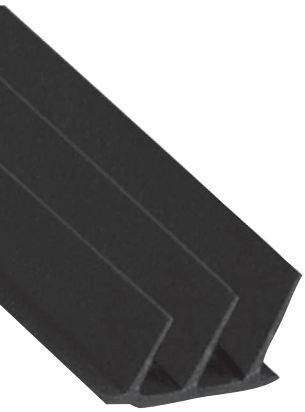

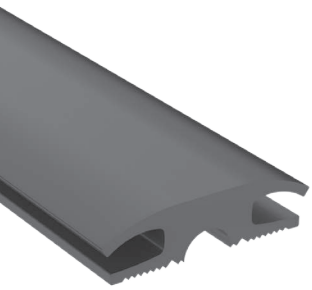

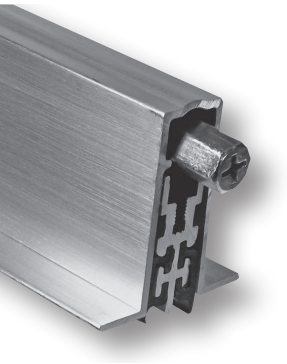

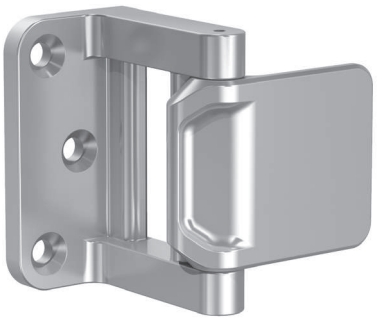

CONTENTS:

Privacy Door Latch, Bracket and Decals....192
SiliconSeal Adhesive Gasketing....193
Automatic Door Bottoms: Acoustic....194
Door Shoes....194
Acoustic Adhesive Corner Pads....194
Automatic Door Bottoms....195
Eco-V™ Thresholds....196
Adjustable-Width Eco-V™ Threshold....197
Stainless Steel Sliding Track Hardware System....198
Cascading Door with Sample Configurations....199
SHS80 System....200
Bypass Track Series....201

INDEX:

PRODUCT	PAGE
411	195
601H	199
1076	199
2113	194
2173	194
2343	194
2802	199
2812	199
3692	194
4131	195
ACP112	194
ADJ232V8	197
ADJ232V14	197
ADJ232x2325V8	197
EV232	196
EV2320	196
EV2322	196
EV2325	196
EV2326	196

PRODUCT	PAGE
H222R1	199
HBP200A	201
PDLAA	192
PDLBRKT	192
PDL-D1	192
PDL-D2	192
S44	193
S88	193
S442	193
S771	193
S771x6	193
S772	193
S773	193
S776	193
SHS80	200
STC411	194
STC4131	194
W60	198

800-824-3018 | www.pemko.com

Check the web site for the up-to-date catalog

Copyright © 2015-2025, ASSA ABLOY Accessories and Door Controls Group, Inc., an ASSA ABLOY Group company. All rights reserved.
Reproduction in whole or in part without the express written permission of ASSA ABLOY Accessories and Door Controls Group, Inc. is prohibited.

PEMKO
ASSA ABLOY

Experience a safer and more open world

PRIVACY DOOR LATCH

- Easy to install, simple to operate
- ADA Compliant
- Enhances room privacy
- UL Classified as a fire door accessory

PDLAA_

AVAILABLE COLORS:

PDLAA26	Polished Chrome
PDLAA26D/15	Brushed Chrome
PDLAA3	Polished Brass
PDLAA4	Brushed Brass
PDLAABSP	Black Suede
PDLAA10BE	Dark Oxidized Satin Bronze, Equivalent

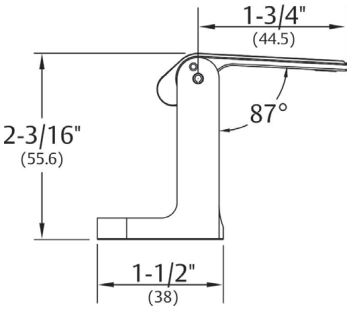

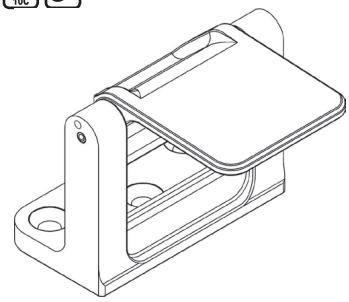



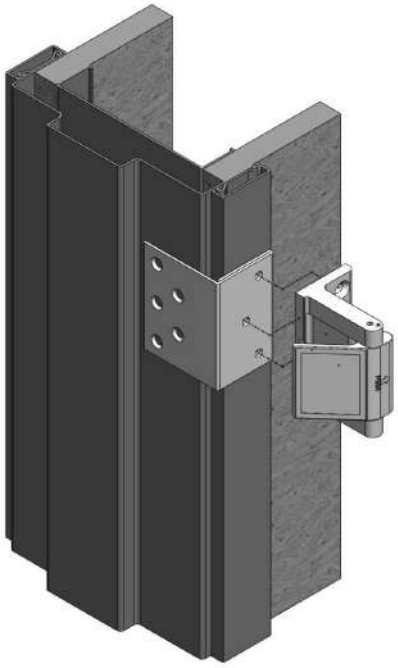

PRIVACY DOOR LATCH BRACKET

- Designed for Timely or Redi-Frame frames with snap on trim
- Bracket allows PDL to be installed in the correct position for proper operation
- Custom powder coat options available.

PDLBRKT_

AVAILABLE COLORS:

Paintable Galvannealed (blank)
Black Suede (BSP)
Satin Bronze (10BE)
White Suede (WSP)

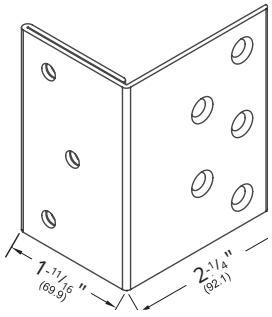

PRIVACY DOOR LATCH DECALS

- Used to cover holes left on door and frame from old style door latch. Per NFPA80 holes must first be filled with like material in order to maintain the fire opening rating
- Made from stable, mar-resistant plastic
- Sub-surface screen printing so verbiage will not be affected by gentle cleaning/dusting

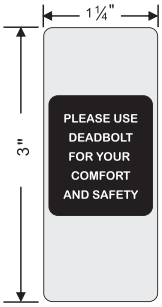

PDL-D1

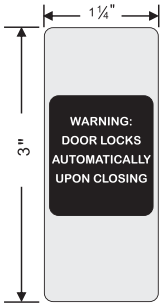

PDL-D2

PEMKO
ASSA ABLOY
Experience a safer and more open world

Copyright © 2015-2025, ASSA ABLOY Accessories and Door Controls Group, Inc., an ASSA ABLOY Group company. All rights reserved. Reproduction in whole or in part without the express written permission of ASSA ABLOY Accessories and Door Controls Group, Inc. is prohibited.

SILICONSEAL ADHESIVE GASKETING

S44_

AVAILABLE FINISHES: **BL, C, D, GR, W**
AVAILABLE LENGTHS: **17', 18', 20', 21', 25', 30', 204', 510'**
ANSI: **R0E154, R0E155**

- Designed for tighter frames
- Demonstrates extremely low closing force
- Seal begins compressing at 5/16"; compresses to seal up to a 1/16" gap

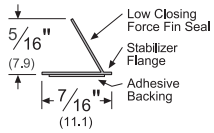

S88_

AVAILABLE FINISHES: **BL, C, D, GR, TAN, W**
AVAILABLE LENGTHS: **17', 18', 20', 21', 25', 30', 204', 510'**
ANSI: **R0E154, R0E155**

- Seal begins compressing at 1/4"; compresses to seal up to a 1/16" gap

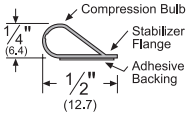

S442_

AVAILABLE FINISHES: **BL, D, W**
AVAILABLE LENGTHS: **17', 18', 20', 21', 25', 30', 510'**
ANSI: **R0E154, R0E155**

- Seal fits flush into corner
- Seal begins compressing at 5/16"; compresses to seal up to a 1/16" gap in either direction

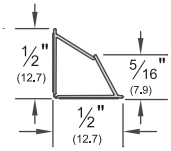

S771_

AVAILABLE FINISHES: **BL, C, D, W**
AVAILABLE LENGTHS: **7', 8', 9', 10'**
ANSI: **R0E154, R0E155, R0E754, R0E755**

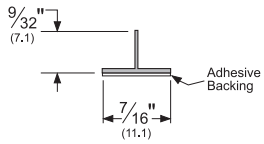

S772_

AVAILABLE FINISHES: **BL, C, D, W**
AVAILABLE LENGTHS: **7', 8', 9', 10'**
ANSI: **R0E154, R0E155, R0E754, R0E755**

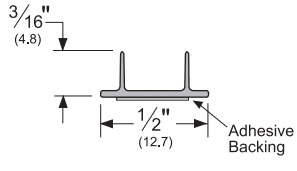

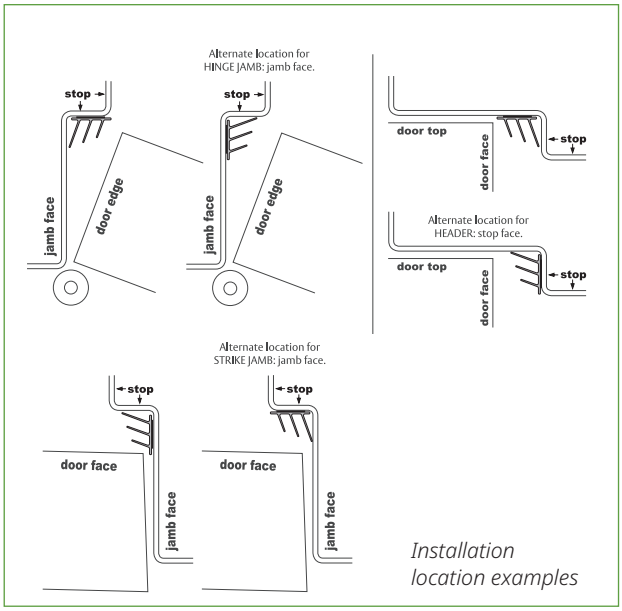

Installation location examples

S773_

AVAILABLE FINISHES: **BL, GR, W**
AVAILABLE LENGTHS: **17', 18', 20', 21', 25', 30', 250', 510'**
ANSI: **R0E154, R0E155**

- Triple-fin design effectively blocks light and sound from infiltrating a room
- Seal begins compressing at 3/8"; compresses to seal up to a 3/32" gap

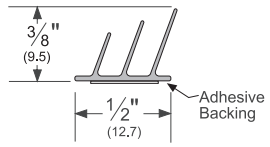

S776_

AVAILABLE FINISHES: **BL**
AVAILABLE LENGTHS: **17', 18', 20', 21', 25', 30'**
ANSI: **R0E154, R0E155**

- Designed for hollow metal and wood meeting stile applications
- Seal begins compressing at 3/8"

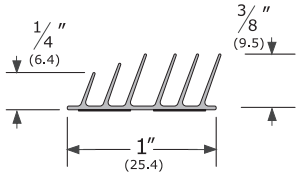

S771x6_

AVAILABLE FINISHES: **BL**
AVAILABLE LENGTHS: **7', 8', 9', 10'**
ANSI: **R0E154, R0E155, R0E754, R0E755**

- Designed for hollow metal and wood meeting stile applications
- Seal begins compressing at 5/16"

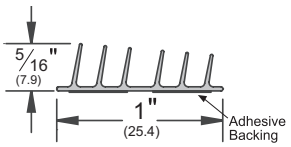

AVAILABLE FINISHES FOR PRODUCTS SHOWN ON THIS PAGE
BL (Black) **C** (Clear) **D** (Dark Brown) **GR** (Light Gray) **TAN** (Tan) **W** (White)

800-824-3018 | www.pemko.com
Check the web site for the up-to-date catalog

Copyright © 2015-2025, ASSA ABLOY Accessories and Door Controls Group, Inc., an ASSA ABLOY Group company. All rights reserved.
Reproduction in whole or in part without the express written permission of ASSA ABLOY Accessories and Door Controls Group, Inc. is prohibited.

PEMKO
ASSA ABLOY
Experience a safer and more open world

AUTOMATIC DOOR BOTTOMS - ACOUSTIC

- Recommended gap under door is 3/8" for optimal acoustic performance; max drop is ¾"
- Internal mechanism allows bar to accommodate slight imperfections in floor materials
- STC411 end plate kit is K435; for doors narrower than 1-¾", specify end plate kit K411
- STC4131 end plate kit is K4133C for Clear Anodized and K4133D for Dark Bronze Anodized
- Non-handed

STC411_PK

AVAILABLE FINISHES: **A**
REPLACEMENT INSERT: **PK4111 (BL)**
ANSI: **R3G324, R3G325**

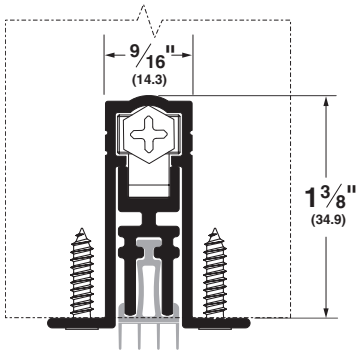

STC4131_PK

AVAILABLE FINISHES: **10BE, BSP, C, D, WSP**
REPLACEMENT INSERT: **PK4111 (BL)**
ANSI: **R3G334, R3G335, R3G344, R3G345**

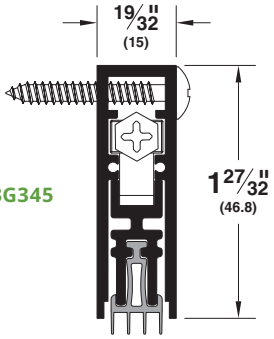

Door Shoes

2173_V

AVAILABLE FINISHES: **A, BSP, D, G, WSP**
AVAILABLE LENGTHS: **36", 48"**
REPLACEMENT INSERT: **EV94 (BL)**
ANSI: **R3D414, R3D415**

Also available with unnotched insert:

2173_V36UN
2173_V48UN

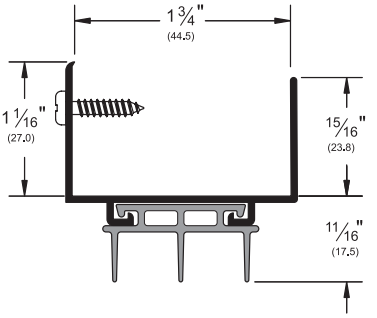

2113_V

AVAILABLE FINISHES: **4E, A, BSP, D, G, WSP**
AVAILABLE LENGTHS: **36", 48"**
REPLACEMENT INSERT: **EV94 (BL)**
ANSI: **R3D414, R3D415**

Also available with unnotched insert:

2113_V36UN
2113_V48UN

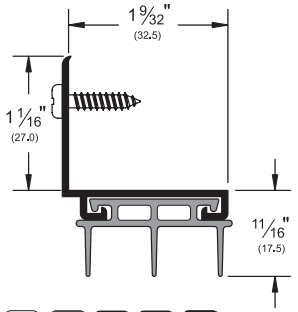

3692_PK773

AVAILABLE FINISH: **A**
AVAILABLE LENGTHS: **36", 48"**
REPLACEMENT INSERT: **PK773 (BL)**
ANSI: **R3G414, R3G415**

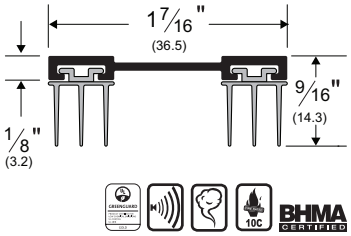

2343_V

AVAILABLE FINISHES: **A, BSP, D, G**
AVAILABLE LENGTHS: **36", 48"**
REPLACEMENT INSERT: **EV94 (BL)**
ANSI: **R3D414, R3D415**

Also available with unnotched insert:

2343_V36UN
2343_V48UN

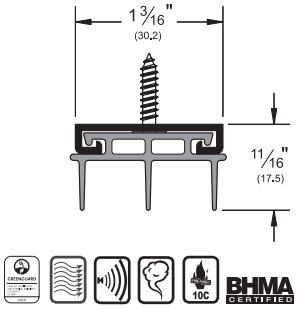

ACOUSTIC ADHESIVE CORNER PADS

- Corner pad with black or white polypropylene pile, with pressure-sensitive adhesive
- Apply to corner of jamb on hinge side to seal against air and light infiltration

ACP112_

AVAILABLE COLORS: **BL, W**

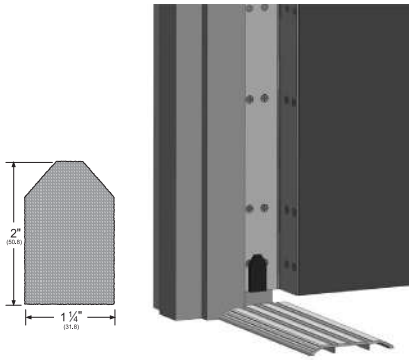

AVAILABLE FINISHES FOR PRODUCTS SHOWN ON THIS PAGE
10BE (Satin Bronze Powder Coated Aluminum) **4E** (Translucent Brass Powder Coat) **A** (Mill Finish Aluminum)
BSP (Black Suede Powder Coated Aluminum) **D** (Dark Bronze Anodized) **G** (Gold Anodized)
WSP (White Suede Powder Coated Aluminum) Corner Pad: **BL** (Black) **W** (White)

Copyright © 2015-2025, ASSA ABLOY Accessories and Door Controls Group, Inc., an ASSA ABLOY Group company. All rights reserved. Reproduction in whole or in part without the express written permission of ASSA ABLOY Accessories and Door Controls Group, Inc. is prohibited.

AUTOMATIC DOOR BOTTOMS

- All Pemko Automatic Door Bottoms, 24" and up, can be manufactured for field alteration.
- Please specify when ordering: Allow 2" for field trimming

411_NBL

AVAILABLE FINISH:
A
REPLACEMENT INSERT:
P14075 (BL, GR)
ANSI:
R3A324, R3A325

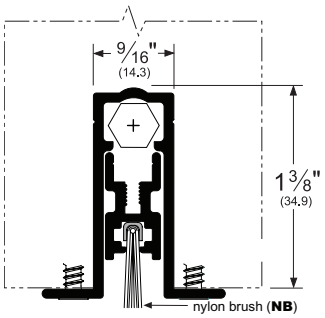

nylon brush (**NB**)

411_RL

AVAILABLE FINISH:
A
REPLACEMENT INSERT:
E7 (BL)
ANSI:
R3G324, R3G325

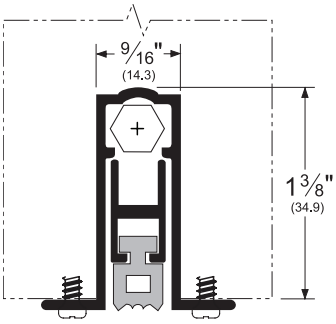

sponge EPDM (**R**)

4131_NBL

AVAILABLE FINISHES:
BSP, C, D, SN
REPLACEMENT INSERT:
P14075 (BL, GR)
ANSI:
R3A334, R3A335, R3A344, R3A345

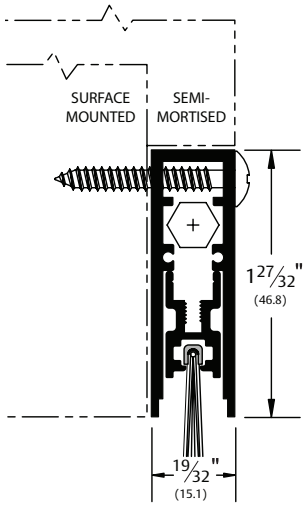

nylon brush (**NB**)

4131_RL

AVAILABLE FINISHES:
BSP, C, D, SN
REPLACEMENT INSERT:
E7 (BL)
ANSI:
R3G334, R3G335, R3G344, R3G345

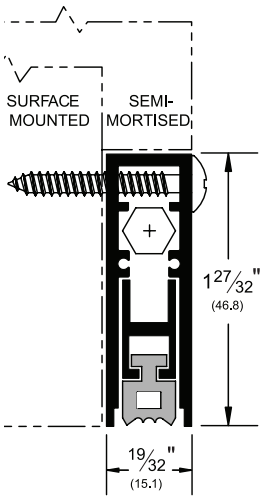

sponge EPDM (**R**)

Alternate Insert For 411

411_PKL

AVAILABLE FINISH:
A
REPLACEMENT INSERT:
PK4132 (BL)
ANSI: **R3G324, R3G325**



PemkoPrene® (**PK**)

411_SL

AVAILABLE FINISH:
A
REPLACEMENT INSERT:
SR6 (BL)
ANSI:
R3E324, R3E325

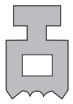

sponge silicone (**S**)

All above products

Alternate Inserts For 4131

4131_PKL

AVAILABLE FINISHES:
BSP, C, D, SN
REPLACEMENT INSERT: **PK4132 (BL)**
ANSI: **R3G334, R3G335, R3G344, R3G345**



PemkoPrene® (**PK**)

4131_SL

AVAILABLE FINISHES:
BSP, C, D, SN
REPLACEMENT INSERT: **SR6 (BL)**
ANSI: **R3E334, R3E335, R3E344, R3E345**

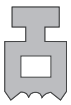

sponge silicone (**S**)

All above products

AVAILABLE FINISHES FOR PRODUCTS SHOWN ON THIS PAGE
10BE (Satin Bronze Powder Coated Aluminum) **A** (Mill Finish Aluminum
BSP (Black Suede Powder Coated Aluminum) **C** (Clear Anodized) **D** (Dark Bronze Anodized)
WSP (White Suede Powder Coated Aluminum) **SN** (Satin Nickel Anodized)

Copyright © 2015-2025, ASSA ABLOY Accessories and Door Controls Group, Inc., an ASSA ABLOY Group company. All rights reserved.
Reproduction in whole or in part without the express written permission of ASSA ABLOY Accessories and Door Controls Group, Inc. is prohibited.

PEMKO
ASSA ABLOY
Experience a safer and more open world

ECO-V™ THRESHOLDS

- Eco-V™ thresholds create an ideal transition where two different pieces of carpet meet, or carpet meets another surface under a door
- Ideal for use in any high-traffic commercial installation, such as hotels and offices
- Eco-V™ thresholds are manufactured from slightly softer material than competitive products. This aids in the cutting and fitting of the threshold and facilitates easier insertion of the carpet into the holding cavities on the carpet side(s) of the threshold
- Eco-V™ thresholds are designed to work in conjunction with Pemko's **2173_V**, **2113_V** and **2343_V** door shoes
- **EV232**, **EV2325**, and **ADJ232V** thresholds meet the criteria outlined in **ADAAG-2010 (Amended)**; **ICC/ANSI A117.1** and **California Building Code, Title 24** for Barrier-Free Entry - ½" max rise above finished floor

EV232_

AVAILABLE COLORS: **BL, D**
AVAILABLE LENGTHS: **36", 48", 73"**
Serves as a transition where two pieces of carpet meet beneath an interior door

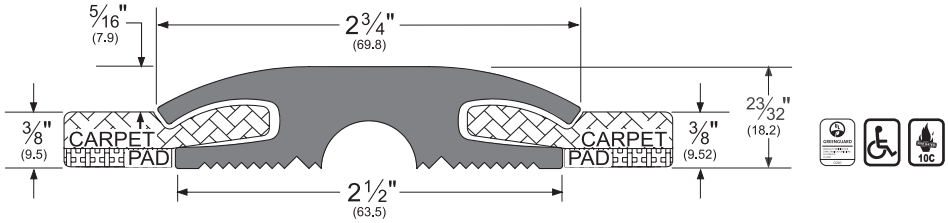

EV2325_

AVAILABLE COLORS: **BL, D**
AVAILABLE LENGTHS: **36", 48", 73"**
Serves as a transition where one piece of carpet meets tile beneath an interior door

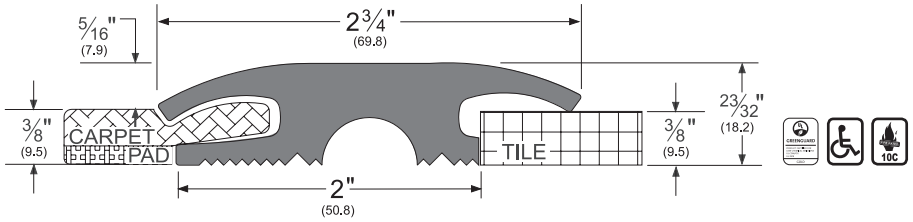

EV2326_

AVAILABLE COLORS: **BL, D**
AVAILABLE LENGTHS: **36", 48", 73"**
Serves as a transition where two pieces of tile meet beneath an interior door

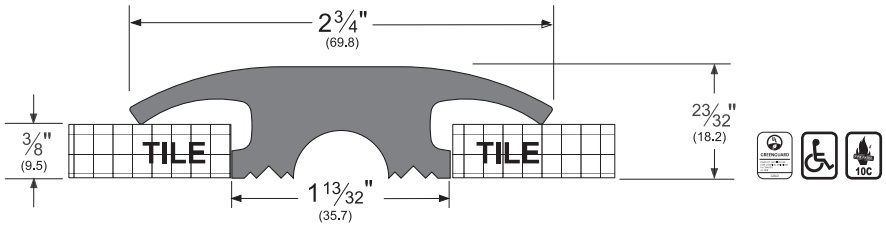

EV2320_

AVAILABLE COLOR: **BL**
AVAILABLE LENGTHS: **36", 48", 73"**
Serves as a transition where carpet meets concrete beneath an interior or exterior door

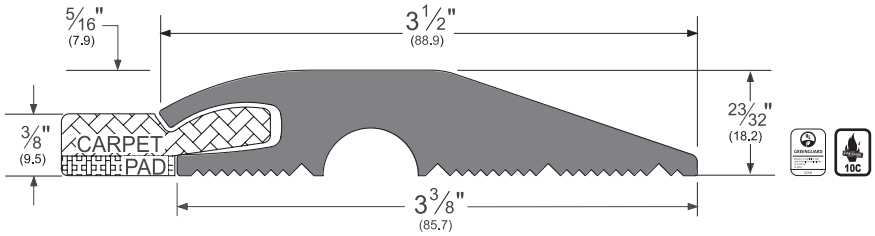

EV2322_

AVAILABLE COLOR: **BL**
AVAILABLE LENGTHS: **36", 48", 73"**
Serves as a transition where carpet meets 1/8" tile beneath an interior door

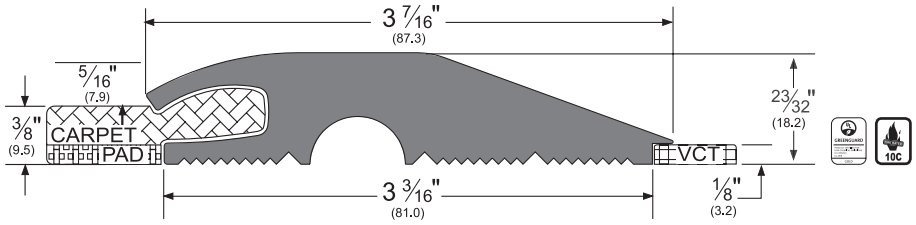

NOTE: Products shown in this section may not be drawn to scale.

AVAILABLE FINISHES FOR PRODUCTS SHOWN ON THIS PAGE
BL (Black) **D** (Dark Brown)

Copyright © 2015-2025, ASSA ABLOY Accessories and Door Controls Group, Inc., an ASSA ABLOY Group company. All rights reserved. Reproduction in whole or in part without the express written permission of ASSA ABLOY Accessories and Door Controls Group, Inc. is prohibited.

ADJUSTABLE-WIDTH ECO-V™ THRESHOLD

- The adjustable-width threshold is designed for installations where the widths of the transition beneath a door may need to change, without completely disassembling and reinstalling the threshold
- The adjustable-width threshold consists of two Eco-V™ end pieces and one Eco-V™ adjustable center section
- Center section (**EV2321** below) can easily be cut to size with a standard razor knife

ADJ232V8_

AVAILABLE COLOR: **BL, D**
AVAILABLE LENGTHS: **36", 48"**

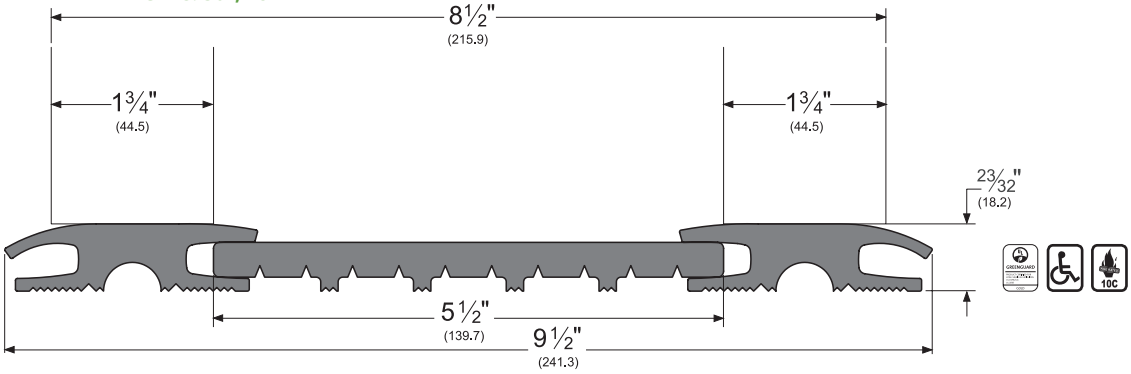

ADJ232V14_

AVAILABLE COLOR: **BL, D**
AVAILABLE LENGTHS: **36", 48"**

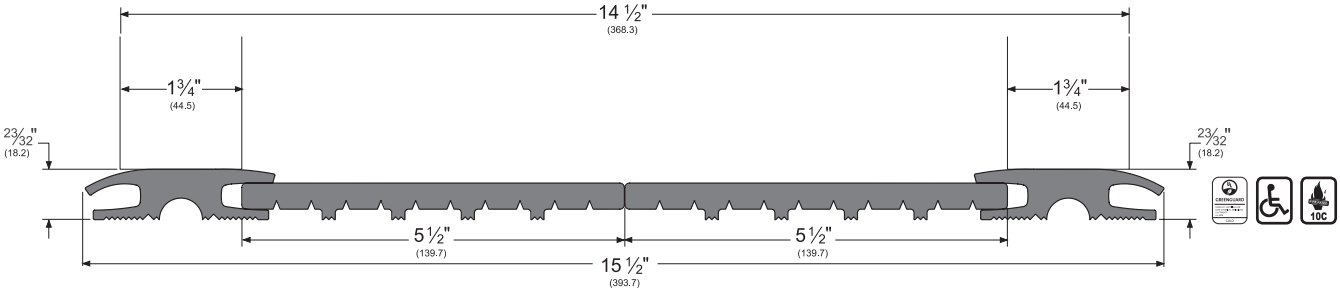

ADJ232x2325V8_

AVAILABLE COLOR: **BL, D**
AVAILABLE LENGTHS: **36", 48"**
For carpet to tile applications; other combinations available

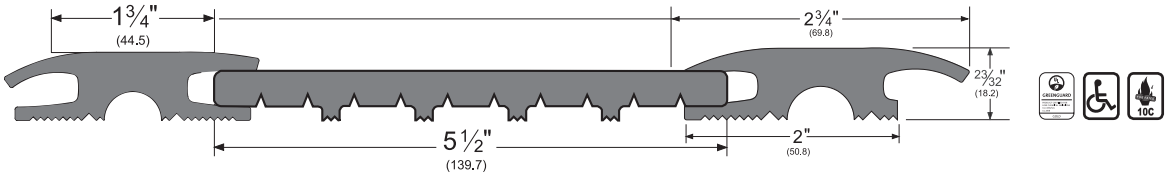

NOTE: Products shown in this section may not be drawn to scale.

AVAILABLE FINISHES FOR PRODUCTS SHOWN ON THIS PAGE
BL (Black) **D** (Dark Brown)

800-824-3018 | www.pemko.com
Check the web site for the up-to-date catalog

Copyright © 2015-2025, ASSA ABLOY Accessories and Door Controls Group, Inc., an ASSA ABLOY Group company. All rights reserved.
Reproduction in whole or in part without the express written permission of ASSA ABLOY Accessories and Door Controls Group, Inc. is prohibited.

PEMKO
ASSA ABLOY
Experience a safer and more open world

STAINLESS STEEL SLIDING TRACK HARDWARE SYSTEM

W60 SERIES FOR WOOD DOORS

For Sliding Panels up to 176 lbs.
Order Form Required



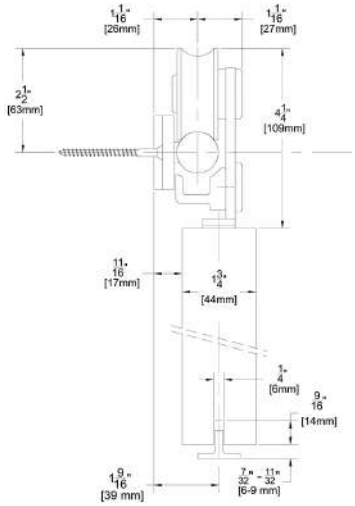

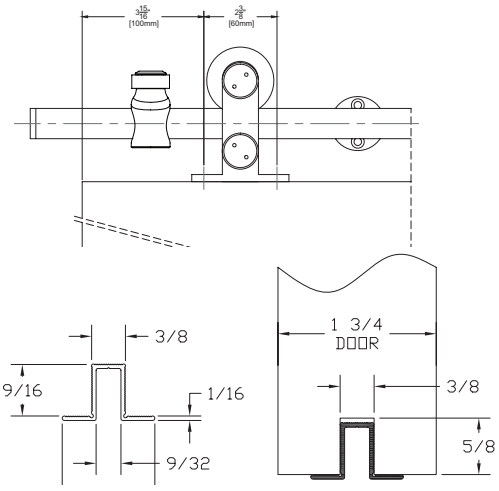

NOTE: Alternate route dimension when using optional EPD3BL

Configurations:
- Single
- Bi-parting

Installations:
- Side Wall Mount (only)

Features:
- Made of 304 stainless steel
- Nylon coated stainless steel wheel for smooth operation
- 176 lb. panel capacity
- 5 year warranty
- Meets ADA push force requirements

Finishes:
- Brushed Stainless Steel (W60)
- Black Powder Coated Stainless Steel (W60D)

W60 Kits Include:

1 ea **BAR/_** Stainless Steel Track
– **BRACKET2** Stainless Steel Wall Brackets
2 ea **62** Stainless Steel Hangers
1 ea **102SS-KIT** Stainless Steel Guide
2 ea **STOP3** Stainless Steel Stops Mounting Hardware
2 ea **SC-TRG** Soft Close Activators

NOTE: If ordering individual parts in the optional Black Powder Coat finish, be sure to include a prefix "D" for Black Powder Coat

Standard Kit Sizes			
PART NUMBER	MATERIAL	TRACK LENGTH	DOOR WIDTH
W60/6	304 Stainless Steel	78 3/4"	36"
W60/8	304 Stainless Steel	98 7/16"	48"
W60D/6	Black Powder Coated 304 Stainless Steel	78 3/4"	36"
W60D/8	Black Powder Coated 304 Stainless Steel	98 7/16"	48"

Custom lengths are available.
Please use the order form available on the Pemko website..

Options:

Hardware Pack (One Door)	**W60_H/PACK**
Mortise Guides	**102N**
Polypropylene Guide Rail	**EPD3BL** For Use With 102N and 102SS-KIT
5/8" Spacer	**BLD-SPACER-58** Pack of 5 5/8" Spacer Recommended for use with 5/8" Gypsum Board When Mounting Track Directly to Gypsum Board
Bottom Guide	**138N-SG1KIT** Surface Mounted Bottom Guide for 1 3/8" door panels

PEMKO
ASSA ABLOY
Experience a safer and more open world

800-824-3018 | www.pemko.com
Check the web site for the up-to-date catalog

Copyright © 2015-2025, ASSA ABLOY Accessories and Door Controls Group, Inc., an ASSA ABLOY Group company. All rights reserved. Reproduction in whole or in part without the express written permission of ASSA ABLOY Accessories and Door Controls Group, Inc. is prohibited.

CASCADING SLIDING DOOR SYSTEM

For Sliding Panels up to 200 lbs. each.



Note: All doors must be of equal width.
Minimum overlap between doors is 2".

Cased Opening



Pocket

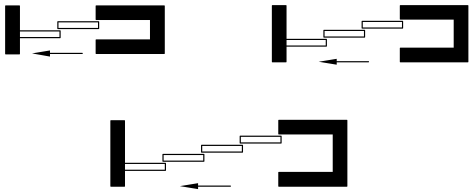

Side Wall Mount

NOTE: Side Wall track Brackets Shown Under Options Must be Ordered Separately for Side Wall Mount Openings



Configurations:

- Bi-part Telescoping
- Single Direction Telescoping

Features:

- Opening and closing of lead door results in the trailing doors to follow because of interlocking hardware at door top edges
- Easy to install with self aligning components on 1 3/4" and 1 3/8" thick doors
- Telescoping panels glide along the track
- Solid steel catches with rubber bumpers ensure durable yet quiet operation
- 200 lb. per door weight capacity
- 5 year warranty

Cascading Kit Includes:

CAS-05 Catches - Mechanical Catch system - 2 Per Door
601H - Track Stops - 2 Per Door
H222R1 - Hangers - 2 Per Door
DBG-02R1 - Door Bottom Guides - 1 Per Door
TELS-23 - End Plates - 2 Per Door
2802C - Single Extrusion - Dual Track
280C - Single Extrusion - Single Track
C1076-TC - Track Connector for CAS200A-4/_ Kits
EPD3-BL - Polypropylene Guide Rails - 1 Per Door
WRENCH14 - 1 Hanger Wrench Hardware Fasteners

Cascading System Kits			
PART NUMBER	TRACK LENGTH	# OF DOORS	INSTALLATION
CAS200A-2/6	6'	2	Pocket Side Wall
CAS200A-2/8	8'	2	
CAS200A-2/10	10'	2	
CAS200A-2/12	12'	2	
CAS200A-3/8	8'	3	Pocket Cased Opening Side Wall
CAS200A-3/10	10'	3	
CAS200A-3/12	12'	3	
CAS200A-3/16	16'	3	
CAS200A-4/8	8'	4	Pocket Cased Opening
CAS200A-4/10	10'	4	
CAS200A-4/12	12'	4	
CAS200A-4/16	16'	4	

For special number of doors and for dark bronze track, please contact Technical Support for more information

Options:

Lock Kit	**SIM150-LOCKKIT** includes lock with edge pull and cup pull
Bolt Kit	**SIM150-BOLTKIT** includes surface bolt, dust-proof strike, cup pull, and edge pull
Fascia	**F134C** Snap-on Fascia
Splice Kit	**C1076-2SPLKIT** for use withBi-Parting systems and 2802C Track **C1076-3SPLKIT** for use with Bi-Parting systems and 2803C Track
Back Stop	**TELS-25** for use with pocket systems when no access to in track stops in pocket
Side Wall Track Bracket	**2812KIT** for use with 2802C Track (1 for every 12" of track) **2813KIT** for use with 2803C Track (1 for every 12" of track)
Side Wall Joining Bracket	**2813-5KIT** for use with Side Wall Bi-Parting systems and **2803C** Track

Copyright © 2015-2025, ASSA ABLOY Accessories and Door Controls Group, Inc., an ASSA ABLOY Group company. All rights reserved.
Reproduction in whole or in part without the express written permission of ASSA ABLOY Accessories and Door Controls Group, Inc. is prohibited.

PEMKO
ASSA ABLOY
Experience a safer and more open world

SHS80 SERIES

For Sliding Panels up to 200 lbs.

Overhead Mount

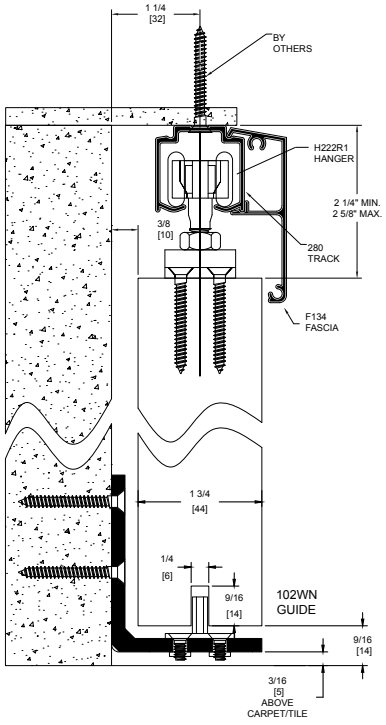

Side Wall Mount

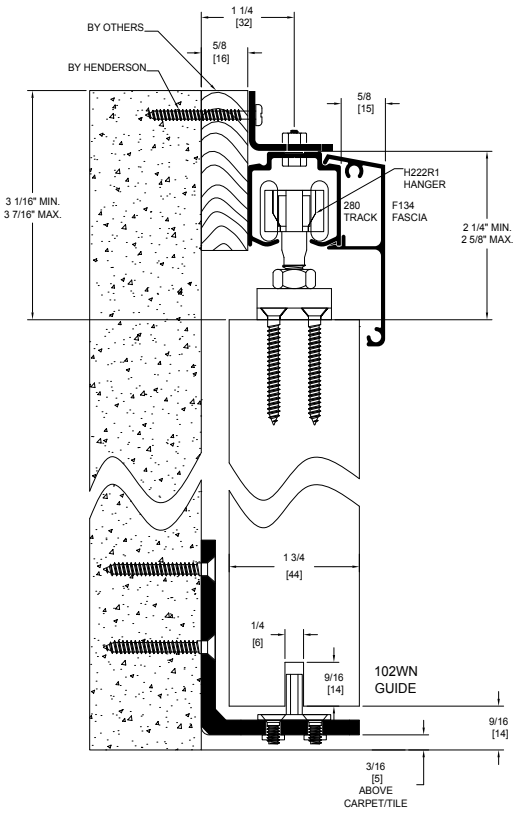

Configurations:

- Single
- Bi-parting

Installations:

- Overhead Mount
- Side Wall Mount

Features:

- Hanger body is made of nickel plated zinc alloy for durability and long life
- Steel ball bearing wheels coated in nylon for smooth operation
- 200 lb. panel capacity
- Optional Soft Close
- 5 year warranty
- Meets ADA push force requirements

SHS80 Kits Include:

1 ea **280C** Clear Anodized Aluminum Track
2 ea **H222R1** - Nickel Plated Zinc Alloy Body
2 ea **601H** Nylon In-Track Clip Stop
1 ea **102WN** White Nylon Mortise Guide on Zinc Plated Steel "L" Metal

Standard Kit Sizes			
PART NUMBER	MATERIAL	TRACK LENGTH	DOOR WIDTH
SHS80/6	Aluminum	72"	36"
SHS80/8	Aluminum	96"	48"

Options:

Fascia	**F134C** clear anodized aluminum fascia **F134D** dark bronze anodized facia
Side Wall Track Brackets	**PC2815** available as 5 pack only, PC2815 pack of 5 281 zinc plated side wall bracket. NOTE: Need one at each end and no more than 2 feet in-between. Fasteners included.
Track	**280D** dark bronze anodized track
End Plate Kit	**K134EP** (use with F134C and 280C only)
Bottom Channel	**94A**
Roller Guide	**106R/94**
Side Wall Mount Extra Hardware Pack	**SHS80/PACK**
Mortise Floor Guide	**102N**
Polypropylene Guide Rail	**EPD3BL** for use with 102N or 102WN
Bottom guide	**138N-SG1KIT** Surface mounted bottom guide for 1 3/8" door panels

Soft Close available. See pages 256-258 for more information.

Alternate Route for EPD3BL

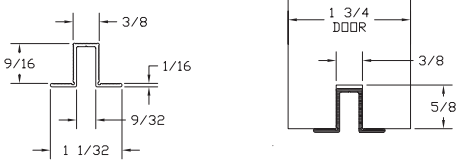

PEMKO
ASSA ABLOY
Experience a safer and more open world

800-824-3018 | www.pemko.com
Check the web site for the up-to-date catalog

Copyright © 2015-2025, ASSA ABLOY Accessories and Door Controls Group, Inc., an ASSA ABLOY Group company. All rights reserved. Reproduction in whole or in part without the express written permission of ASSA ABLOY Accessories and Door Controls Group, Inc. is prohibited.

BYPASS TRACK SERIES

For Bypass Panels up to 200 lbs.

1 3/4" Thick Doors
Side Wall Mount

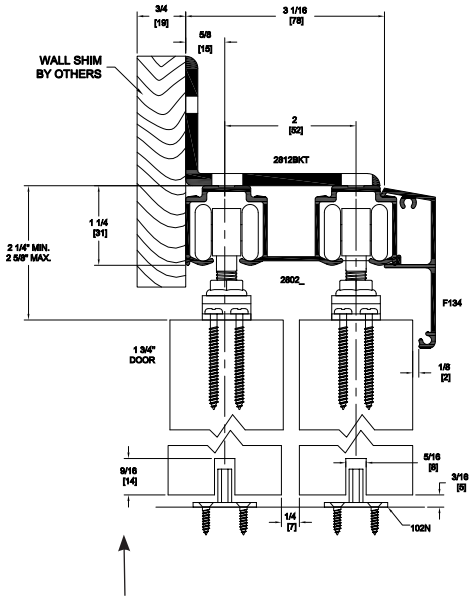

NOTE: Route door 9/16" deep by 1/4" wide to receive 102N Guide.

1 3/4" Thick Doors
Overhead Mount

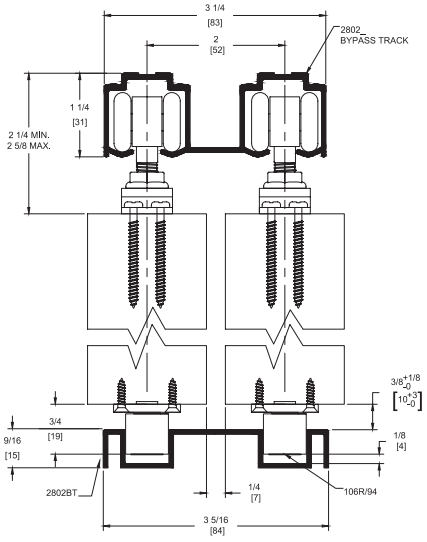

* Side Wall mounting: use one (1) 2812KIT at each end of track and 24" on center

Configurations:

- For Bypass Doors

Features:

- Fits 1 3/8" and 1 3/4" doors
- Hanger body is made of nickel plated zinc alloy for durability and long life
- Steel ball bearing wheels coated in nylon for smooth operation
- 200 lb. panel capacity
- Load capacity 200 lbs. per door panel (2 hangers)
- Extruded aluminum track
- Optional Soft Close
- 5 year warranty
- Meets ADA push force requirements

HBP200A Kits Include:

1 ea **2802C** Clear Anodized Aluminum Track
4 ea **H222R1** Hangers
2 ea **102N** White Nylon Mortise Guide
4 ea **TELS-14KIT** In Track Stops
1 ea Adjusting Wrench and Mounting Hardware

Standard Kit Sizes		
PART NUMBER	TRACK LENGTH	DOOR WIDTH
HBP200A/4	48"	2 @ 26" Min*
HBP200A/5'4	64"	2 @ 34" Min*
HBP200A/6	72"	2 @ 38" Min*
HBP200A/7	84"	2 @ 44" Min*
HBP200A/8	96"	2 @ 50" Min*
HBP200A/10	120"	2 @ 62" Min*
HBP200A/12	144"	2 @ 74" Min*

*Minimum door overlap is 2".

Options:

Hardware Kit	**H200PACK**
Mounting Bracket	**2812KIT**
Track	**2802D** dark bronze anodized track
Track Stop (bumper)	**287R1-KIT**
Bottom Channel	**94A**
Fascia, Snap-On	**F134C** clear anodized aluminum fascia. **F134D** dark bronze anodized aluminum fascia
Roller Guide	**106R/94**
Dual Guide Channel	**2802BT**
Polypropylene Guide Rail	**EPD3BL** for use with 102N
Bottom guide	**138N-SG1KIT** Surface mounted bottom guide for 1 3/8" door panels **138N-SG2KIT** Surface mounted bottom guide for 1 3/8" bypassing door panels

Soft Close available. See pages 256-258 for more information.

AVAILABLE FINISHES FOR PRODUCTS SHOWN ON THIS PAGE
A (Mill Finish Aluminum) C (Clear Anodized) D (Dark Bronze Anodized)

Copyright © 2015-2025, ASSA ABLOY Accessories and Door Controls Group, Inc., an ASSA ABLOY Group company. All rights reserved.
Reproduction in whole or in part without the express written permission of ASSA ABLOY Accessories and Door Controls Group, Inc. is prohibited.

PEMKO
ASSA ABLOY
Experience a safer and more open world